ADAX VP11

Table of contents

1. **Installation manual**

   Pages 2-3

2. **ET ECO thermostat user guide**

   Page 4 – NO
   Page 5 – SE
   Page 6 – FI
   Page 7 – GB
   Page 8 – DE
   Page 9 – PT
   Page 10 – LT
   Page 11 – LV
   Page 12 – EE
   Page 13 – BG
   Page 14 – GR
   Page 15 – CZ
   Page 16 – HU
   Page 17 – HR
   Page 18 – PL
   Page 19 – SK
   Page 20 – RO
   Page 21 – RU
   Page 22 – ES
   Page 23 – IL
   Page 24 – SI
   Page 25 – IT
   Page 26 – RS
   Page 27 – NL
   Page 28 – FR

3. **Ecodesign information**

   Pages 29-34

4. **Declaration of conformity**

   Page 35

2020-07-27 art. nr.:62239

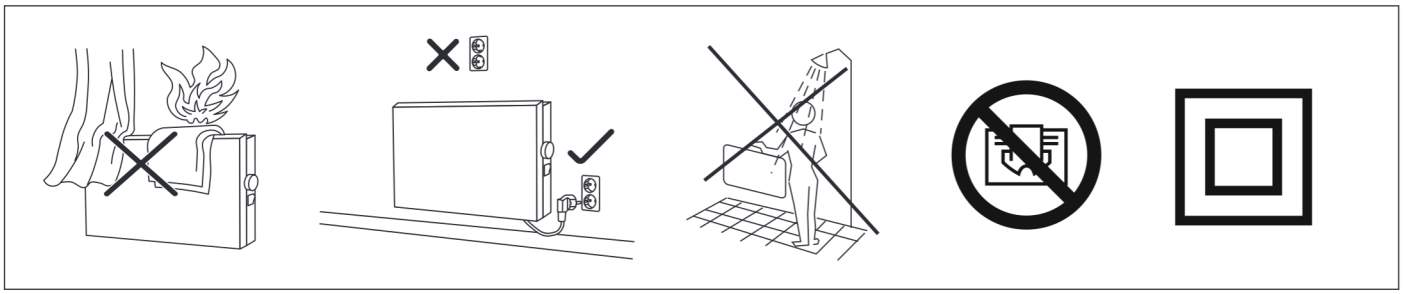

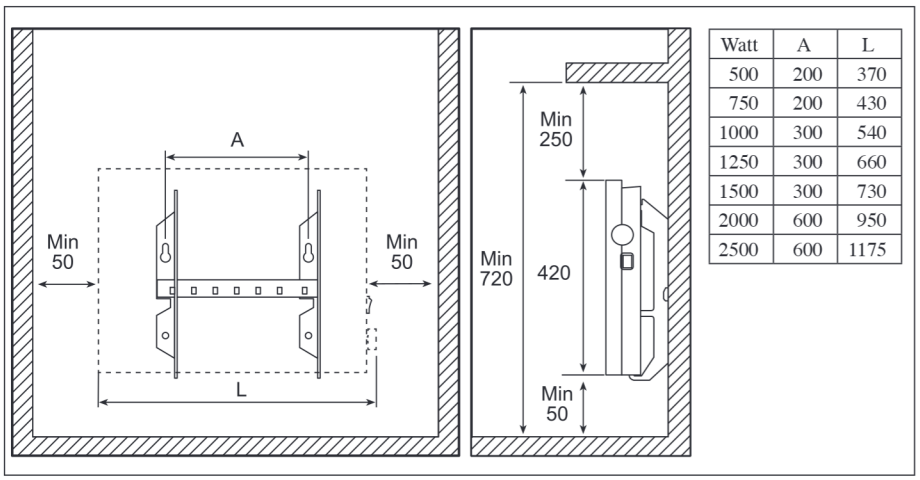

Watt	A	L
500	200	370
750	200	430
1000	300	540
1250	300	660
1500	300	730
2000	600	950
2500	600	1175

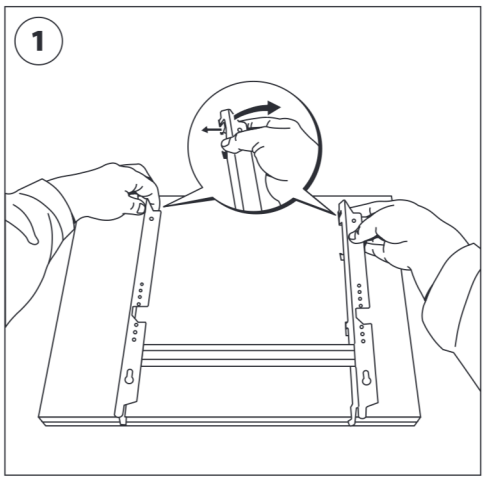

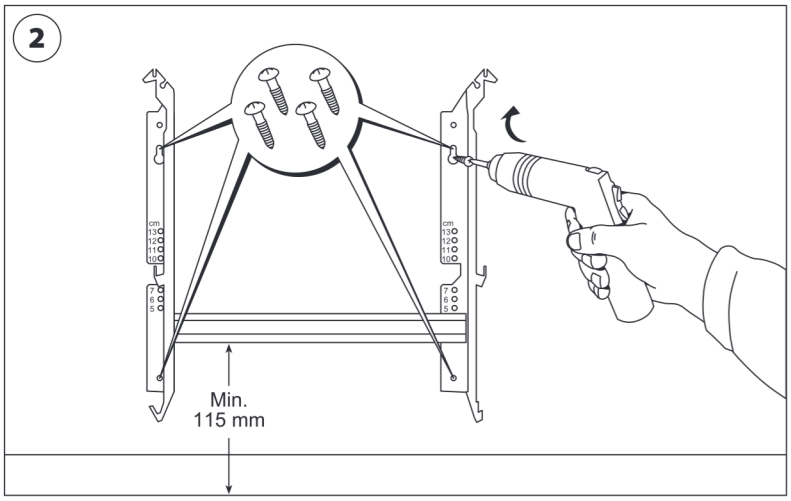

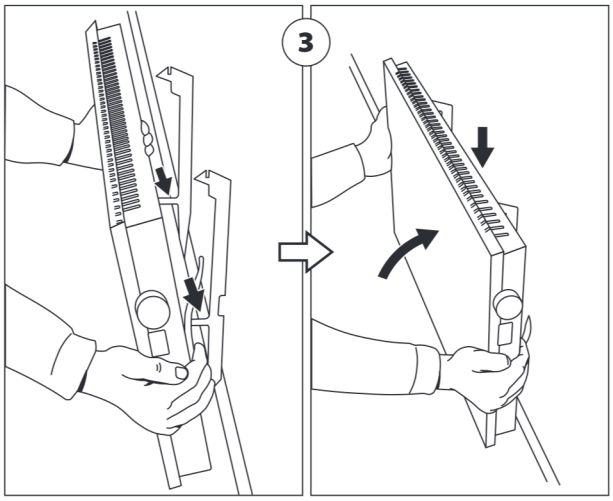

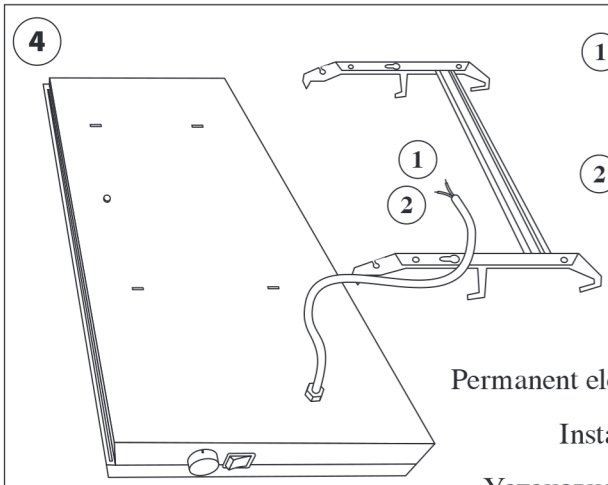

(1) – Live = Brown
– Fazė = Rudas
– Фаза = Коричневый

(2) – Neutral = Blue
– Neutralus = Mėlynas
– Нейтральный = Синий

Permanent electric installation must be carried out by an authorised electrician

Instaliavimas ir pajungimas turi būti atliekamas sertifikuoto elektriko

Установка должна быть произведена сертифицированным электриком